NAIRN

PTL3425-PBR/CUB

TROY LIGHTING

Taking inspiration from the rugged Moray coast in Scotland, the Nairn table lamp is designed from a 3-D scan of a sculpture by Chandler McLellan. The asymmetric base stems from the artist's appreciation for natural stones that lean, sometimes impossibly, against each other. Playing with positive and negative space, a distinctive cut-out accents one form, creating a moment of drama within the balanced composition. The oblong shapes are complemented by a natural wicker shade and French wiring. Part of our Chandler McLellan collection.

*Due to the one-of-a-kind nature of the medium, exact colors and patterns may vary slightly from the image shown.



FINISHES

VINTAGE GOLD LEAF w/ Ceramic Rustic Bone

DIMENSIONS / SPECS

Height: 24.5"
Width/Diameter: 22"
Canopy/Backplate: 4.5"
Product Weight: 13.2lb
Canopy/Backplate Shape: Oval
Sloped Ceiling Compatible: No
Living Finish: No
Uplight Only: No

Shade 1: Natural Woven
Shade 1 Finish: Light Natural Wicker
Shade 1 Top Width: 4"
Shade 1 Bottom L/W: 0" / 22"
Shade 1 Height: 9.5"

ELECTRICAL

Bulb 1
Bulb Included: No
Socket: E26 Medium Base
Bulb Type: A19
Max Wattage: 15
Bulb Quantity: 1
Cord Type: SPT-2 BROWN FABRIC
Switch Type: ON/OFF SWITCH ON SOCKET
Gem Box Required (2"x3"): No
Dark Sky: No
Convertible: No

Voltage:
UL Rating: cUL Dry

SHIPPING

Carton 1: 25" x 25" x 25"
Carton 1 Weight: 30lb
Shipping Method: Ground
Country of Origin: PH

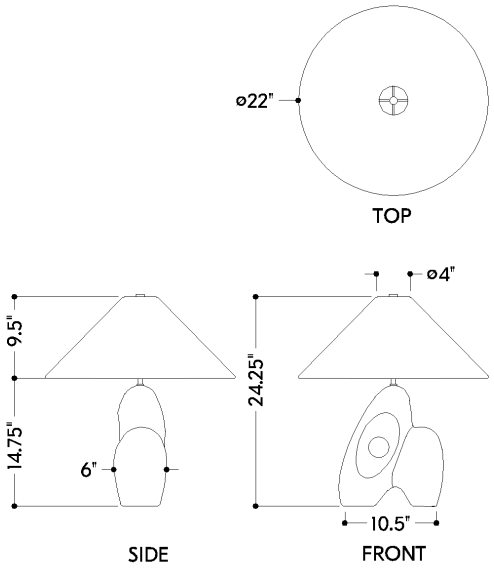
ø22"
TOP
ø4"
9.5"
14.75"
6"
24.25"
10.5"
SIDE
FRONT