HARAC

B7811-PBR/BRZ

TROY LIGHTING

A classic RLM shade enhanced by industrial details and a mixed metal finish, the Harac sconce brings modern style to exterior walls and doorways. The Bronze finish is complemented by decorative elements like the knurled Patina Brass socket cup. Serving as a powerful downlight, Harac is available in two sizes to fulfill your outdoor lighting needs.

FINISHES

PATINA BRASS w/ BRONZE
Coastal Suitable Finish (EPM): No

DIMENSIONS / SPECS

Height: 10.75"
Width/Diameter: 15"
Canopy/Backplate: 4.75"
Product Weight: 2.95lb
Extension: 17.25"
Top to Center: 2.5"
Canopy/Backplate Shape: Round
Sloped Ceiling Compatible: No
Living Finish: No
Uplight Only: Yes

Shade 1: Acrylic
Shade 1 Finish: Clear
Shade 1 Top Width: 2"
Shade 1 Height: 0.75"
Shade 2: Aluminum
Shade 2 Finish: Bronze
Shade 2 Top Width: 2"
Shade 2 Bottom L/W: 0" / 15"
Shade 2 Height: 3"



ELECTRICAL

Bulb 1
Bulb Included: N/A
Socket: Integrated LED
Bulb Type: LED
Max Wattage: 8
Bulb Quantity: 1
Wire Length: 7"
Cord Type: B & W TEFLON W/ GROUND WIRE
Dimmer Type: ELV, TRIAC Dimmable
Gem Box Required (2"x3"): No
Dark Sky: Yes
Convertible: No
CRI: 90
Color Temp.: 3000k
Lumens: 425
Title 24: No
Field Serviceable: No
Voltage: 120V

Voltage:
UL Rating: cETL Wet
Gem Box: Not Required

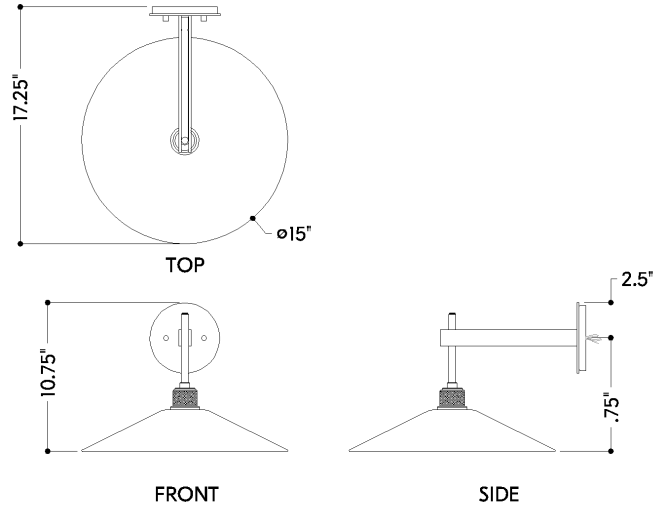

SHIPPING

Carton 1: 18" x 20" x 14"
Carton 1 Weight: 6lb
Shipping Method: Ground
Country of Origin: TH