GARETH

B6718-PBR/TBK

TROY LIGHTING

Drawing inspiration from traditional lanterns, this family of sleek exterior fixtures includes sconce and a portable lantern in multiple sizes. Elongated silhouettes and a mixed-finish combination of Textured Black and Patina Brass give these lanterns a contemporary update. While Gareth is equipped with a single chunky pillar candle for a timeless look, the light source is actually a lightweight aluminum puck with LED technology housed the bottom of the glass cylinders. Gareth is available as both a sconce and a portable lantern in multiple sizes. The portable option is rechargeable and includes a convenient handle for easy transport.

FINISHES

PATINA BRASS w/ TEXTURE BLACK
Coastal Suitable Finish (EPM): No

DIMENSIONS / SPECS

Height: 18.25"
Width/Diameter: 5"
Canopy/Backplate: 5"
Product Weight: 5.68lb
Extension: 6"
Top to Center: 3"
Canopy/Backplate Shape: Rectangle
Sloped Ceiling Compatible: No
Living Finish: No
Uplight Only: Yes

Shade 1: Glass
Shade 1 Finish: Clear
Shade 1 Top Length: 13.75"
Shade 1 Top Width: 4.25"
Shade 1 Bottom L/W: 13.75" / 4.25"
Shade 2: Glass
Shade 2 Finish: Clear
Shade 2 Top Length: 13.75"
Shade 2 Top Width: 4.5"
Shade 2 Bottom L/W: 13.75" / 4.5"



ELECTRICAL

Bulb 1
Bulb Included: N/A
Socket: Integrated LED
Bulb Type: LED
Max Wattage: 5
Bulb Quantity: 1
Wire Length: 7"
Cord Type: B & W TEFLON W/ GROUND WIRE
Dimmer Type: ELV, TRIAC Dimmable
Gem Box Required (2"x3"): No
Dark Sky: No
Convertible: No
CRI: 90
Color Temp.: 3000k
Lumens: 200
Title 24: No
Field Serviceable: No
Voltage: 120V

Voltage:
UL Rating: cETL Wet
Gem Box: Not Required

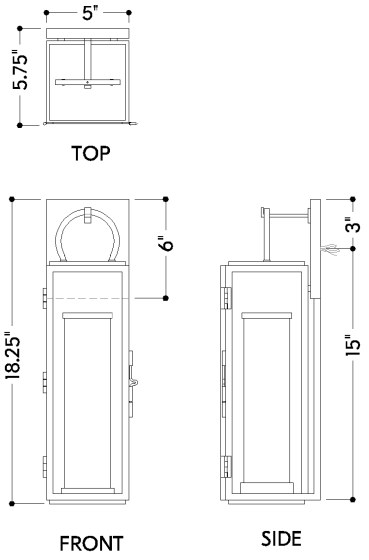

HUDSON VALLEY
LIGHTING GROUP

GARETH

B6718-PBR/TBK

TROY LIGHTING

SHIPPING

Carton 1: 13" x 9" x 22"
Carton 1 Weight: 8lb
Shipping Method: Ground
Country of Origin: TH