IVER

B2019-PBR

TROY LIGHTING

Inspired by folk art, this statement sconce has been carved from turned wood. The interplay of geometric forms creates a pop of interest while the petite proportions lend Iver versatility in various spaces. An off-white linen shade complements the overall natural, playful desig ethos.

*Due to the one-of-a-kind nature of the medium, exact colors and patterns may vary slightly from the image shown.

FINISHES

PATINA BRASS

DIMENSIONS / SPECS

Height: 18.75"
Width/Diameter: 6"
Canopy/Backplate: 4.75"
Product Weight: 2.4lb
Extension: 6.5"
Top to Center: 11.5"
Canopy/Backplate Shape: Round
Sloped Ceiling Compatible: No
Living Finish: No
Uplight Only: No

Shade 1: Textile
Shade 1 Finish: Off White Linen
Shade 1 Top Width: 3.75"
Shade 1 Bottom L/W: 0" / 6"
Shade 1 Height: 7.5"

ELECTRICAL

Bulb 1
Bulb Included: No
Socket: E12 Candelabra Base
Bulb Type: B11
Max Wattage: 8
Bulb Quantity: 1
Wire Length: 7"
Gem Box Required (2"x3"): No
Dark Sky: No
Convertible: No

Voltage:
UL Rating: cUL Damp
Gem Box: Not Required

SHIPPING

Carton 1: 16" x 7" x 13"
Carton 1 Weight: 4lb
Shipping Method: Ground
Country of Origin: VN



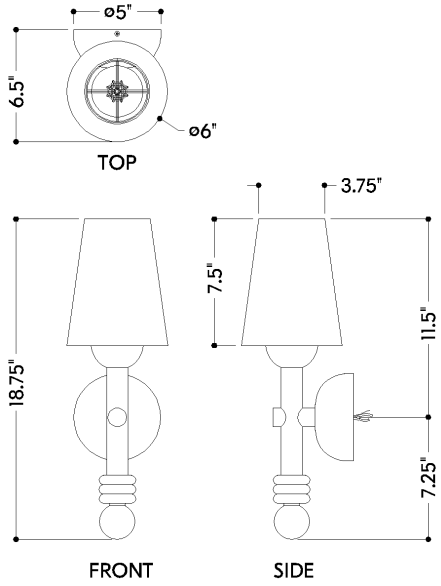

HUDSON VALLEY
LIGHTING GROUP