LEHI

B1919-PBR

TROY LIGHTING

Defined by its vertical planar design, the minimalist Lehi sconce creates a soft glow in small spaces. Its folded, enclosed shape directs ligh emission at the wall, muting the glare to create a tranquil experience. Enhanced with integrated LED and finished in Patina Brass, Lehi is ideal for smaller spaces like hallways and bathrooms.

FINISHES

PATINA BRASS



DIMENSIONS / SPECS

Height: 18.5"
Width/Diameter: 5"
Canopy/Backplate: 5"
Product Weight: 4.5lb
Extension: 4.75"
Top to Center: 15.75"
Canopy/Backplate Shape: Square
Sloped Ceiling Compatible: No
Living Finish: No
Uplight Only: No

ELECTRICAL

Bulb 1
Bulb Included: N/A
Socket: Integrated LED
Max Wattage: 12
Bulb Quantity: 1
Wire Length: 7"
Cord Type: B & W TEFLON W/ COPPER GROUND WIRE
Dimmer Type: ELV, TRIAC Dimmable
Gem Box Required (2"x3"): No
Dark Sky: No
Convertible: No
CRI: 90
Color Temp.: 2700k
Lumens: 650
Title 24: No
Field Serviceable: Yes
Voltage: 120V

Voltage:
UL Rating: cETL Damp
Gem Box: Not Required

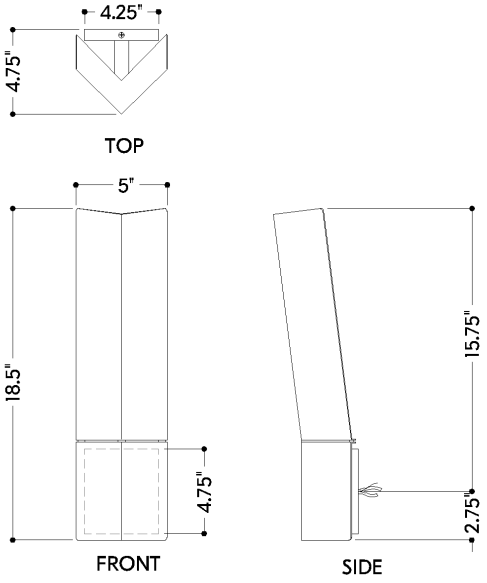

SHIPPING

Carton 1: 23" x 8" x 8"
Carton 1 Weight: 6lb
Shipping Method: Ground
Country of Origin: VN