HUDSON VALLEY
LIGHTING GROUP

Hudson Valley Lighting | Troy Lighting | Mitzi | Corbett Lighting

⚠ WARNING/CAUTION

- DISCONNECT POWER BEFORE RE-LAMPING OR WIRING THE FIXTURE. READ ALL INSTRUCTIONS COMPLETELY BEFORE STARTING INSTALLATION.
- TO AVOID THE RISK OF FIRE OR SHOCK, FIXTURE MUST BE INSTALLED IN COMPLIANCE WITH ALL APPLICABLE NATIONAL AND LOCAL ELECTRICAL/BUILDING CODES. THE INSTALLATION AND MAINTENANCE OF THIS UNIT SHOULD BE COMPLETED BY A LICENSED ELECTRICIAN OR CERTIFIED FACTORY TRAINED TECHNICIAN.
- CALIFORNIA PROP 65: THIS LIGHTING FIXTURE CONTAINS CHEMICALS KNOWN TO THE STATE OF CALIFORNIA TO CAUSE CANCER, BIRTH DEFECTS, AND/OR OTHER REPRODUCTIVE HARM. WASH HANDS AFTER USE.
- UNPACK FIXTURE, PARTS AND PARTS BAG(S) BEFORE DISCARDING THE CARTON. MAKE CERTAIN THAT ALL PARTS ARE FOUND. INSPECT THE FIXTURE PRIOR TO INSTALLATION FOR ANY DAMAGE. HVLG DOES NOT PAY OR REIMBURSE ELECTRICIAN FEES. FIXTURE MAY NOT BE RETURNED ONCE IT HAS BEEN INSTALLED. SEE WARRANTY FOR EXCEPTIONS.
- PLEASE CLEAN WITH A SOFT, DRY CLOTH ONLY! DO NOT USE CLEANSERS.

⚠ ATTENTION PRUDENCE

- DÉBRANCHEZ L'ALIMENTATION AVANT DE REMPLIR OU DE CÂBLER LE LUMINAIRE. LISEZ COMPLÈTEMENT TOUTES LES INSTRUCTIONS AVANT DE COMMENCER L'INSTALLATION
- POUR ÉVITER LE RISQUE D'INCENDIE OU D'ÉLECTROCUTION, LE LUMINAIRE DOIT ÊTRE INSTALLÉ CONFORMÉMENT À TOUS LES CODES ÉLECTRIQUES/DE CONSTRUCTION NATIONAUX ET LOCAUX APPLICABLES. L'INSTALLATION ET L'ENTRETIEN DE CET APPAREIL DOIVENT ÊTRE EFFECTUÉS PAR UN ÉLECTRICIEN AGRÉÉ OU UN TECHNICIEN CERTIFIÉ FORMÉ EN USINE.
- CALIFORNIE PROP 65 : CET APPAREIL D'ÉCLAIRAGE CONTIENT DES PRODUITS CHIMIQUES CONNUS PAR L'ÉTAT DE CALIFORNIE POUR PROVOQUER LE CANCER, DES MALADIES CONGÉNITALES ET/OU D'AUTRES DOMMAGES À LA REPRODUCTION. LAVER LES MAINS APRÈS UTILISATION.
- DÉBALLEZ LE LUMINAIRE, LES PIÈCES ET LE(S) SAC(S) DE PIÈCES. AVANT DE JETER LE CARTON. ASSUREZ-VOUS QUE TOUTES LES PIÈCES SONT TROUVÉES. INSPECTEZ LE LUMINAIRE AVANT DE L'INSTALLER POUR DÉTECTER TOUT DOMMAGE. HVLG NE PAIE NI NE REMBOURSE LES FRAIS D'ÉLECTRICITÉ. LE LUMINAIRE NE PEUT PAS ÊTRE RETOURNÉ UNE FOIS QU'IL A ÉTÉ INSTALLÉ. VOIR GARANTIE POUR LES EXCEPTIONS.
- VEUILLEZ NETTOYER UNIQUEMENT AVEC UN CHIFFON DOUX ET SEC ! N'UTILISEZ PAS DE NETTOYANTS.

⚠ PRECAUCIÓN ADVERTENCIA

- DESCONECTE LA CORRIENTE ANTES DE VOLVER A ENCENDER O CONECTAR EL APARATO. LEA TODAS LAS INSTRUCCIONES ANTES DE COMENZAR LA INSTALACIÓN.
- PARA EVITAR EL RIESGO DE INCENDIO O DESCARGA ELÉCTRICA, LA INSTALACIÓN DEBE SER REALIZADA DE CONFORMIDAD CON TODOS LOS CÓDIGOS DE CONSTRUCCIÓN / ELÉCTRICOS NACIONALES Y LOCALES APLICABLES. LA INSTALACIÓN Y EL MANTENIMIENTO DE ESTA UNIDAD DEBE SER REALIZADO POR UN ELECTRICISTA LICENCIADO O UN TÉCNICO CAPACITADO POR UNA EN FÁBRICA CERTIFICADORA.
- CALIFORNIA PROP 65: ESTE APARATO DE ILUMINACIÓN CONTIENE PRODUCTOS QUÍMICOS QUE EL ESTADO DE CALIFORNIA SE CONOCE POR CAUSAR CÁNCER, DEFECTOS DE NACIMIENTO Y / U OTROS DAÑOS REPRODUCTIVOS. LAVARSE LAS MANOS DESPUÉS DEL USO.
- DESEMBALA LOS ACCESORIOS, REPUESTOS Y BOLSA (S) DE REPUESTOS. ANTES DE DESECHAR LA CAJA. ASEGÚRESE DE ENCONTRAR TODAS LAS PIEZAS. INSPECCIONE EL ACCESORIO ANTES DE LA INSTALACIÓN POR CUALQUIER DAÑO. HVLG NO PAGA NI REEMBOLSA LAS TARIFAS DEL ELECTRICISTA. EL ACCESORIO NO SE PUEDE DEVOLVER UNA VEZ QUE SE HAYA INSTALADO. CONSULTE LA GARANTÍA PARA EXCEPCIONES.
- ¡LIMPIE CON UN PAÑO SECO Y SUAVE ÚNICAMENTE! NO USE LIMPIADORES.

HUDSON VALLEY LIGHTING

PEBBLE
3476
Installation Instructions

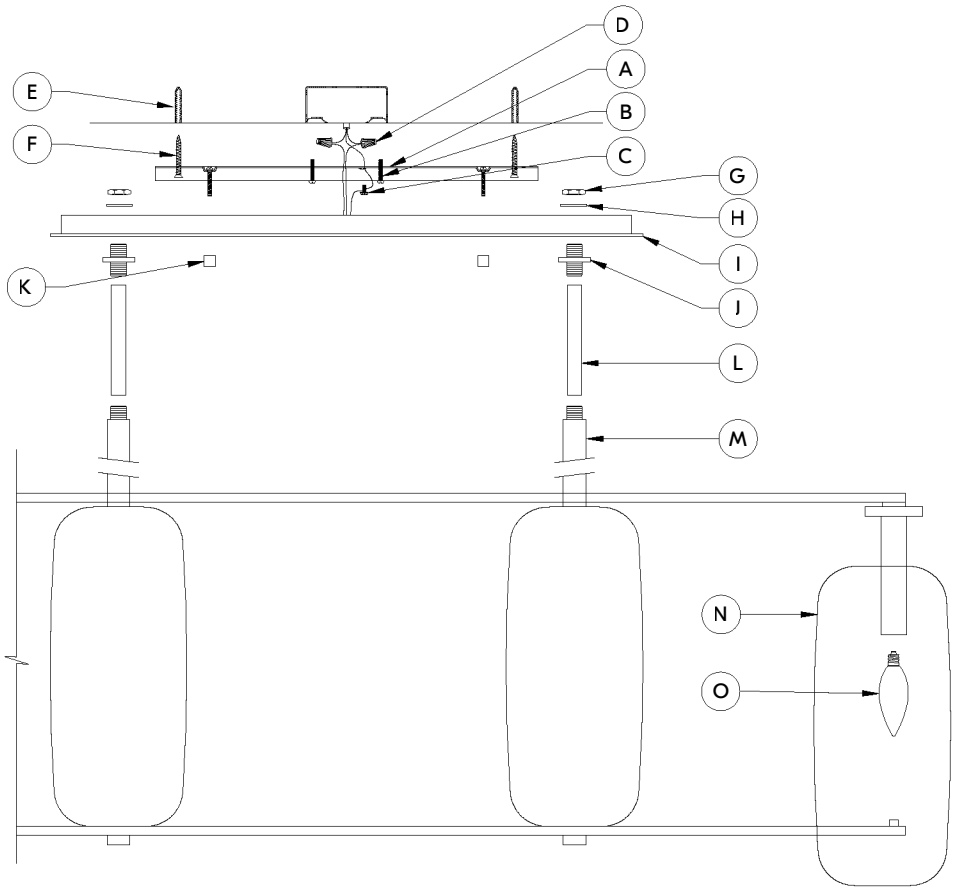

FIXTURE INSTALLATION

1. Determine the location for the lamp. Using the MOUNTING PLATE (A) as a template, mark the location of the holes for the wall WALL ANCHORS (E).

2. Drill the appropriate size holes for the WALL ANCHORS (E). (the holes should be slightly smaller than the size of the anchors.) Install the WALL ANCHORS (E) to the hole.

3. Attach the MOUNTING PLATE (A) onto the junction box using the MOUNTING SCREWS (B). This fixture is designed to be mounted on standard junction box. The junction box must be securely mounted to the structure of the building. Screw in the WOOD SCREW (F) to the WALL ANCHORS (E).

4. Feed the wire through the STEM KIT (L) and twist tightly onto the FIXTURE ASSEMBLY (M). Keep adding additional stems until you desired hanging height is met.

5. Slide the CONNECTOR (J), CANOPY(I), WASHER (H) and HEX NUT (G) onto the STEM KIT (L), and secure them onto the top end of the STEM KIT (L).

6. Attach the Ground wire (Green) to the ground inside the outlet box (Generally green or bar copper wire) or the GROUND SCREW (C) on the MOUNTING PLATE (A). NEVER CONNECT GROUND WIRE TO "HOT" WIRE! FAILURE TO FOLLOW THIS COULD RESULT IN SERIOUS INJURY OR DEATH!

7. Connect the white fixture lead to the neutral (Generally white) wire in the outlet box. Fasten the wires together with an approved fastener (WIRE NUT) (D). Starting 1" below the fastener, tightly wrap the connection with electrical tape so that the connections seals the end of the fastener. MAKE SURE THERE ARE NO EXPOSED WIRE OF STRANDS THAT COULD CAUSE A DANGEROUS SHORT CIRCUIT!

8. Connect the black fixture leads to the hot (Generally black) wire in the junction box. Fasten the joined wires same as previous step. NEVER REVERSE HOT AND NEUTRAL WIRES. FAILURE TO FOLLOW THIS COULD RESULT IN SERIOUS INJURY OR DEATH!

9. Push the wires back into the junction box. Lift up the CANOPY (J) up to the ceiling, and screw them by the CAP NUTS (K).

10. Screw the BULB (O) into the SOCKET of the fixture.THIS FIXTURE IS RATED FOR MAX 60 WATT TYPE B LAMP. DO NOT EXCEED THE RECOMMENDED WATTAGE!

11. Tilt and lift the GLASS (N) up to the FIXTURE ASSEMBLY (M) of the fixture.

12. Restore power to the outlet at the breaker or fuse box.

PART(S)	REPLACEMENT PART NAME	NUMBER
A,B,C,D,E,F	HARDWARE KIT	HDW-3476
G,H,I,J	CANOPY ASSEMBLY	CAS-3471
K	CAP NUT	CPN-3471
L	STEM SET	STM-BS1600-SET
N	GLASS	GLS-3471