TEL 905.695.2055 **toll free** 1.800.660.5391
FAX 905.695.2056 **toll free** 1.800.660.5390
33 West Beaver Creek Road Richmond Hill, Ontario Canada L4B 1L8

OLETTE, OLETTE-CHD-12LT-36IN

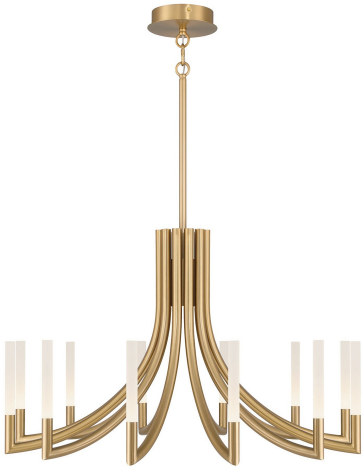

PRODUCT DETAILS

No.	:	49011-012
Product Color	:	GOLD
Product Material	:	STEEL
Shade / Accent Colour	:	ACRYLIC
Shade / Accent Material	:	ACRYLIC
Diameter	:	36"
Height	:	22"
Weight	:	29.9LBS

LIGHT SOURCE DETAILS

Number of Bulbs	:	12
Light Source	:	LED
Light Source Type	:	INTEGRATED LED
Input Voltage	:	120V
Bulb Voltage	:	36V
Wattage	:	12 X 3.34W
Total Wattage	:	40W
Delivered Lumens	:	1933LM
Kelvin	:	3500K
CRI	:	90
Bulb Included	:	YES
Dimmable	:	YES

TECHNICAL DETAILS

Hanging Support Type	:	ROD
Beam Angle	:	360

OPTIONS AVAILABLE

ITEM NO.	FINISH	SHADE
49011-012	GOLD	
49011-029	BRUSHED NICKEL	
49011-036	MATTE BLACK	

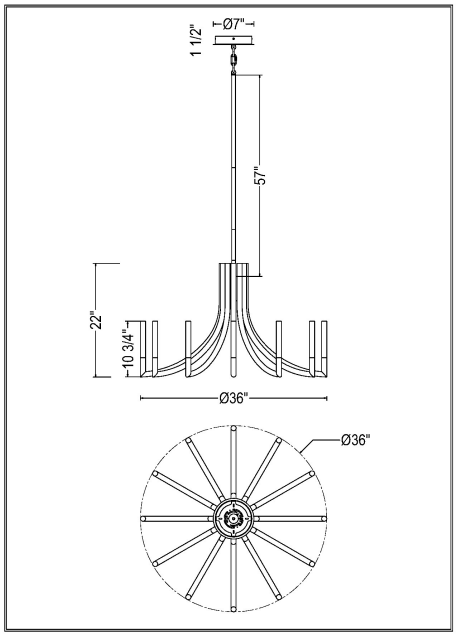

PROJECT INFORMATION

Job Name: Date: Type:

Comments: