STRASBOURG

501-42-VB

CORBETT

Bold and architectural, the Strasbourg family gives Art Deco style a modern twist. Available in two sizes, the chandelier features a fanned silhouette that forms a dynamic, artistic statement overhead. Finished in Vintage Brass, each arm is capped on both ends by a cast-seeded glass optic, creating an even spread of light that extends in all directions. The sconce shares the same edgy design language in a more compact, restrained form.

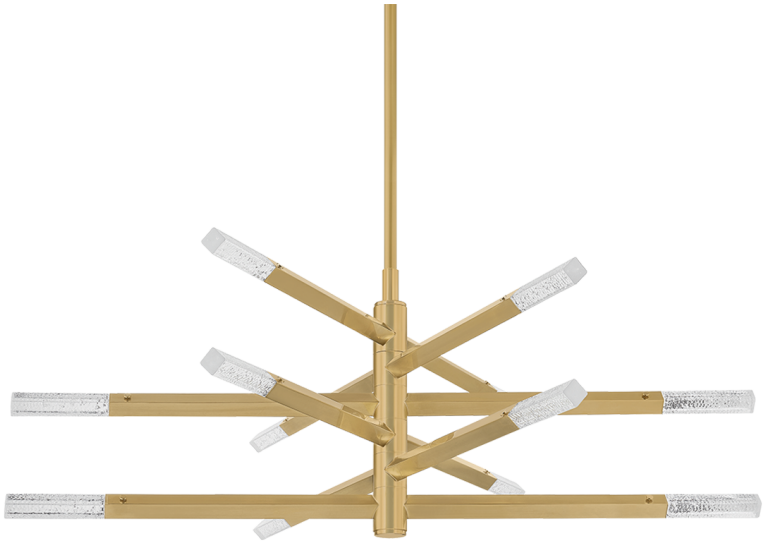

FINISHES

VINTAGE BRASS

DIMENSIONS / SPECS

Height: 14.25"
Width/Diameter: 42"
Minimum Height: 20.5"
Maximum Height: 62.5"
Canopy/Backplate: 5.5"
Hanging Type: 1-6" / 2-12" / 1-18" Stems
Product Weight: 22.2264lb
Canopy/Backplate Shape: Round
Sloped Ceiling Compatible: No
Living Finish: Yes
Uplight Only: No

Shade 1: Glass
Shade 1 Finish: Clear Seeded
Shade 1 Top Length: 1"
Shade 1 Top Width: 1"
Shade 1 Height: 7"

ELECTRICAL

Bulb 1
Bulb Included: N/A
Socket: Integrated LED
Bulb Type: LED
Max Wattage: 40
Bulb Quantity: 12
Wire Length: 144"
Cord Type: B & W TEFLON W/ GROUND WIRE
Dimmer Type: TRIAC, 0-10 VOLT
Gem Box Required (2"x3"): No
Dark Sky: No
Convertible: No
CRI: 90
Color Temp.: 2700k
Lumens: 950
Title 24: No
Field Serviceable: Yes
Voltage: 120-277V

Voltage:
UL Rating: cETL Damp

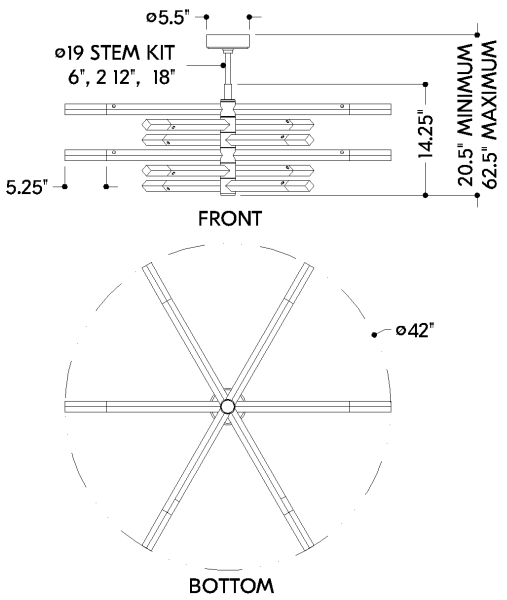

SHIPPING

Carton 1: 37" x 20" x 7"
Carton 1 Weight: 29lb
Shipping Method: Ground
Country of Origin: VN